CS11N40A

N-Channel Enhancement Mode Power MOSFET

MAIN CHARACTERISTICS

I_D	11A
V_{DSS}	400V
R_{DSON}-typ (@V_{GS}=10V)	0.50Ω

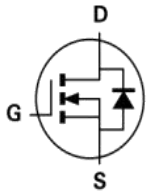

FEATURES

- Fast Switching
- Low ON Resistance
- Low Gate Charge
- 100% Single Pulse avalanche energy Test

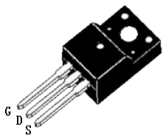

TO-220F

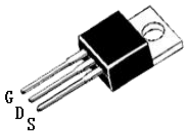

TO-220AB

APPLICATIONS

- Power switch circuit of adaptor and charger.

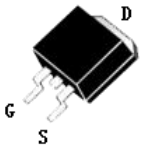

TO-263

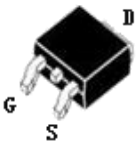

TO-252

MECHANICAL DATA

- Case: Molded plastic
- Mounting Position: Any
- Molded Plastic: UL Flammability Classification Rating 94V-0
- Lead free in compliance with EU RoHS 2011/65/EU directive
- Solder bath temperature 275℃ maximum,10s per JESD 22-B106

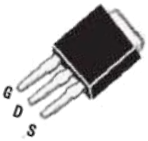

TO-251

Product specification classification

Part Number	Package	Mode Name	Pack
CS11N40A1	TO-220AB	CS11N40A	Tube
CS11N40A2	TO-220F(0.5mm)	CS11N40A	Tube
CS11N40A8	TO-220F(1.3mm)	CS11N40A	Tube
CS11N40A3	TO-263	CS11N40A	Tube
CS11N40A3-R	TO-263	CS11N40A	Tape
CS11N40A5	TO-252	CS11N40A	Tape
CS11N40A4	TO-251	CS11N40A	Tape

Maximum Ratings at Tc=25°C unless otherwise specified

Characteristics	Symbol	Value		Unit
		220F	220AB/263/252/251	
Drain-Source Voltage	V_{DS}	400		V
Gate-Source Voltage	V_{GS}	±30		V
Continue Drain Current	I_D	11		A
Pulsed Drain Current (Note1)	I_{DM}	40		A
Power Dissipation	P_D	33	98	W
Single Pulse Avalanche Energy (Note1)	E_{AS}	500		mJ
Operating Temperature Range	T_J	-55 to +150		°C
Storage Temperature Range	T_{STG}	-55 to +150		°C
Thermal Resistance, Junction to Case	$R_{\theta JC}$	2.27	0.89	°C/W
Thermal Resistance, Junction to Ambient	$R_{\theta JA}$	100	62	°C/W

Note1:Pulse test: 300 μs pulse width, 2 % duty cycle

Electrical Characteristics at Tc=25°C unless otherwise specified

Characteristics	Test Condition	Symbol	Min	Typ	Max	Unit
Drain-Source Breakdown Voltage	V_{GS} = 0 V,I_D = 250 μA	BV_{DSS}	400	-	-	V
Drain-Source Leakage Current	V_{DS} = 400 V, V_{GS} = 0 V	I_{DSS}	-	-	1	μA
Gate Leakage Current	V_{GS} = ± 30 V, V_{DS} = 0 V	I_{GSS}	-	-	±100	nA
Gate-Source Threshold Voltage	V_{DS} = V_{GS} , I_D = 250 μA	$V_{GS(th)}$	2	-	4	V
Drain-Source On-State Resistance	V_{GS} = 10 V, I_D = 5 A	$R_{DS(on)}$	-	0.50	0.58	Ω
Forward Transconductance	V_{DS} = 15 V, I_D = 5 A	gfs	-	10	-	S
Input Capacitance	V_{GS} = 0 V, V_{DS} = 25 V, f = 1 MHz	C_{iss}	-	1270	-	pF
Output Capacitance		C_{oss}	-	146	-	pF
Reverse Transfer Capacitance		C_{rss}	-	10	-	pF
Turn-on Delay Time(Note2)	I_D = 10 A, V_{DD} = 200 V, R_G= 10 Ω	$t_{d(ON)}$	-	18	-	ns
Rise Time(Note2)		t_r	-	23	-	ns
Turn-Off Delay Time(Note2)		$t_{d(OFF)}$	-	41	-	ns
Fall Time(Note2)		t_f	-	19	-	ns
Total Gate Charge(Note2)	I_D = 10 A, V_{DD} = 320 V, V_{GS} = 10 V	Q_G	-	24	-	nC
Gate to Source Charge(Note2)		Q_{GS}	-	6	-	nC
Gate to Drain Charge(Note2)		Q_{GD}	-	9	-	nC

Source-Drain Diode Characteristics at Ta=25°C unless otherwise specified

Characteristics	Test Condition	Symbol	Min.	Typ.	Max.	Unit
Maximun Body-Diode Continuous Current		I_S	-	-	11	A
Maximun Body-Diode Pulsed Current(Note2)		I_{SM}	-	-	40	A
Drain-Source Diode Forward Voltage	I_{SD} = 11 A	V_{SD}	-	-	1.5	V
Reverse Recovery Time(Note2)	I_{SD} = 11 A, V_{GS} = 0 V, dI_F / dt = 100 A/μs	trr	-	344	-	ns
Reverse Recovery Charge(Note2)		Qrr	-	2.3	-	μC

Note2:Pulse test: 300 μs pulse width, 2 % duty cycle

RATINGS AND CHARACTERISTIC CURVES

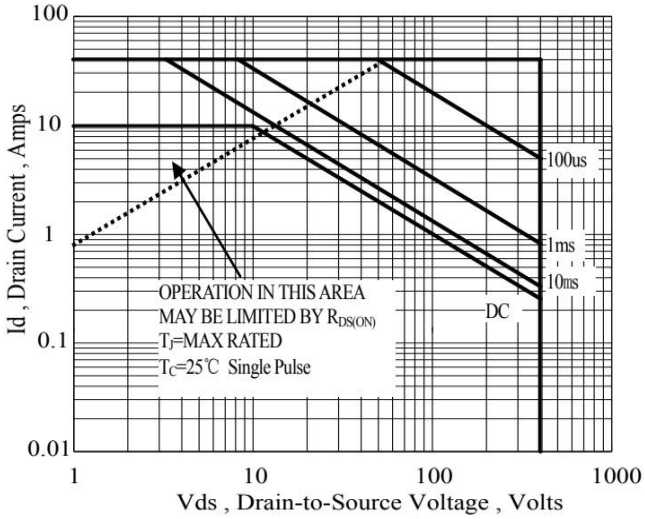

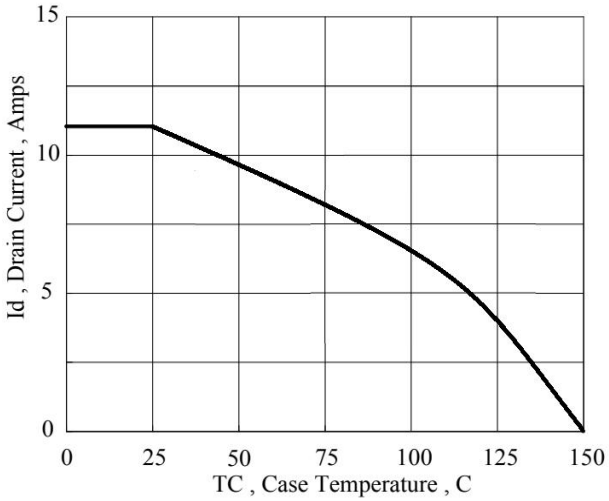

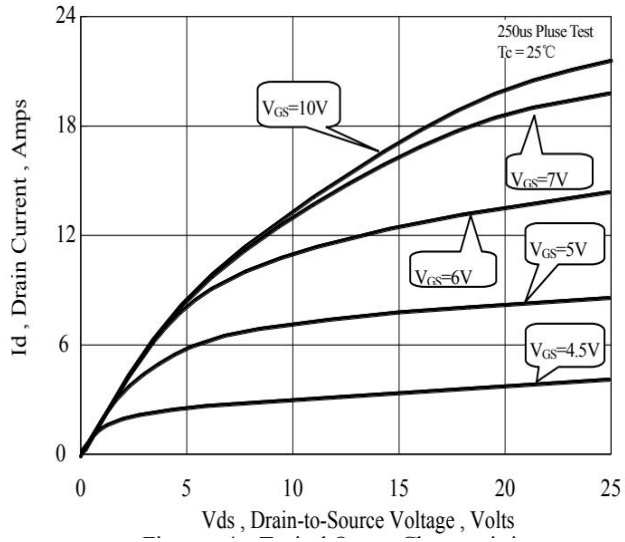

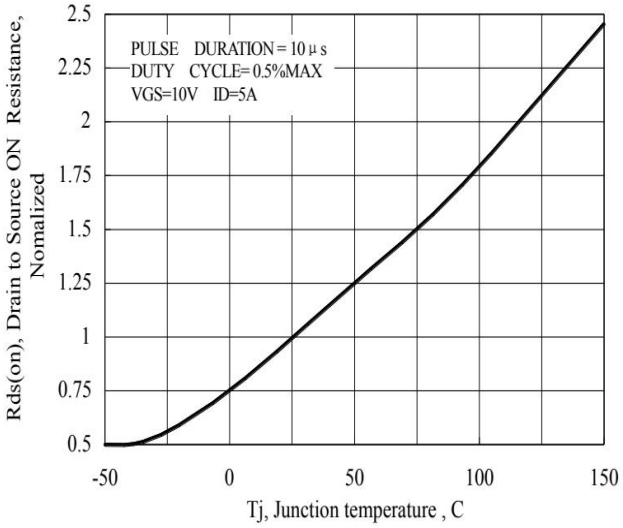

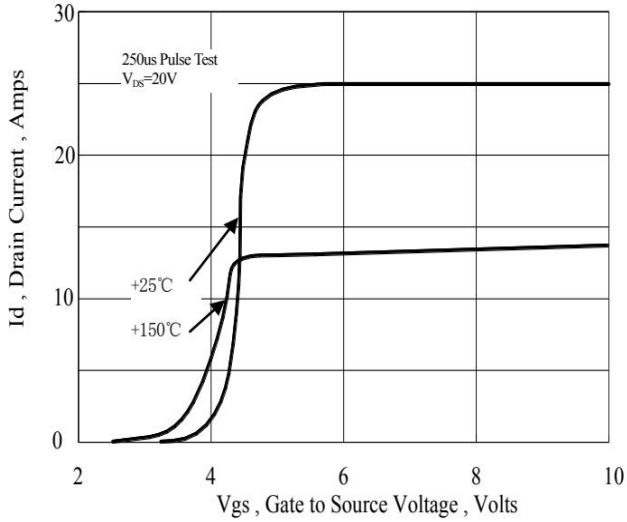

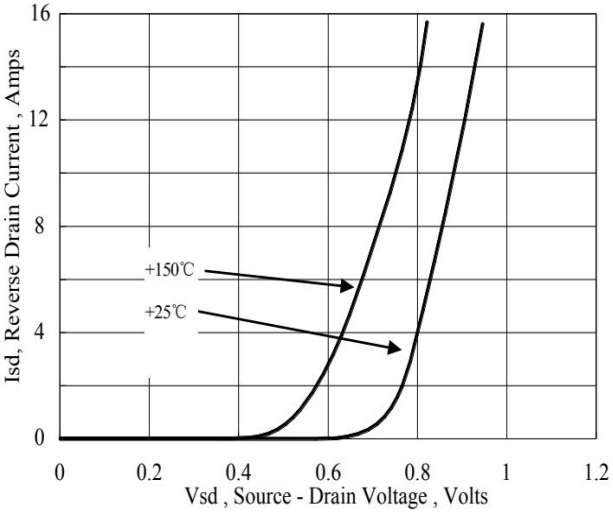

Package Outline Dimensions millimeters

TO-220F

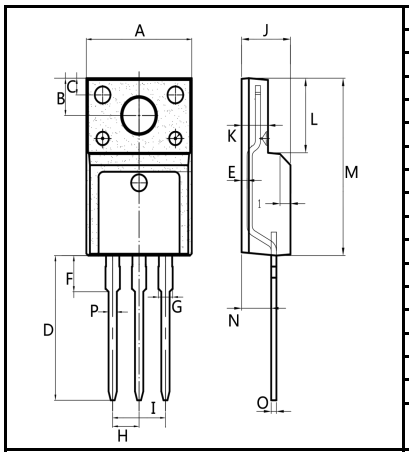

Dim.	Min.	Max.
A	9.95	10.35
B	2.95	3.25
C	1.25	1.45
D	12.65	12.95
E	0.4	0.6
F	2.8	3.5
G	1.3	1.45
H	Typ 2.54	
I	Typ 5.08	
J	4.6	4.75
K	2.45	2.65
L	6.45	6.85
M	15.4	16
N	2.75	3.05
O	0.45	0.55
P	0.7	0.9
All Dimensions in millimeter		

TO-220AB

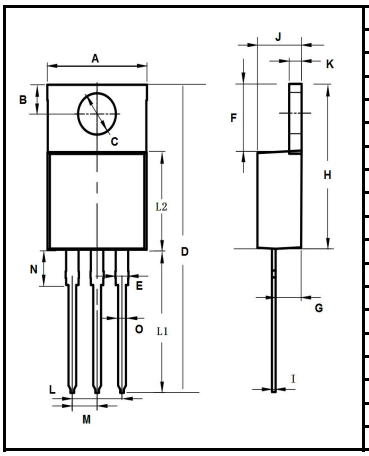

Dim.	Min.	Max.
A	10.15	10.35
B	2.5	2.95
C	3.7	3.9
D	28.5	29.5
E	1.2	1.4
F	6.2	6.55
G	2.85	3.25
H	15	16
I	0.35	0.42
J	4.3	4.55
K	1.2	1.4
L	Typ5.08	
L1	13	14
L2	8.5	9.5
M	Typ2.54	
N	2.8	3.5
O	0.7	0.9
All Dimensions in millimeter		

TO-263

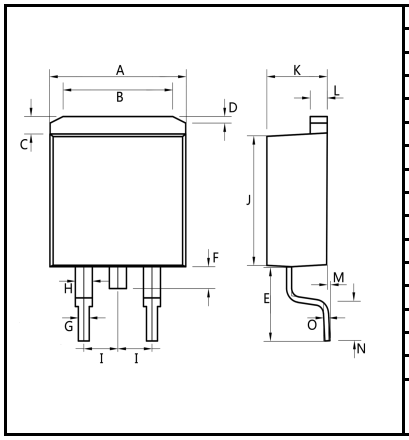

Dim.	Min.	Max.
A	10.1	10.35
B	6	8
C	1.2	1.5
D	0.55	1
E	4.3	5.3
F	1.4	1.6
G	0.75	0.85
H	1.2	1.5
I	Typ2.54	
J	8.5	9.5
K	4.3	4.55
L	1.25	1.35
M	0.02	0.23
N	2.2	2.8
O	0.3	0.4
All Dimensions in millimeter		

TO-252

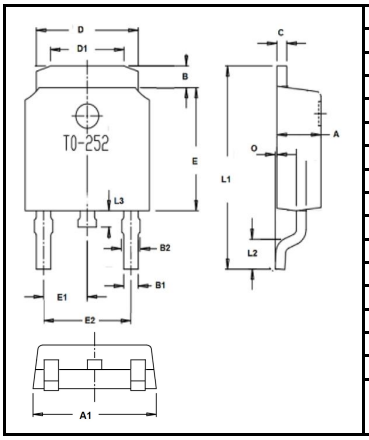

Dim.	Min.	Max.
A	2.1	2.5
A1	6.3	6.9
B	0.95	1.55
B1	0.6	0.8
B2	0.75	0.95
C	Typ0.5	
D	5.3	5.5
D1	3.65	4.05
E	5.8	6.4
E1	Typ2.3	
E2	Typ4.6	
O	0	0.15
L1	9	11
L2	Typ1.5	
L3	0.7	1
All Dimensions in millimeter		

TO-251

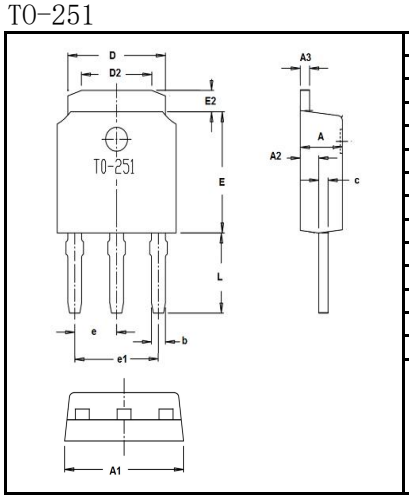

Dim.	Min.	Max.
A	2.1	2.5
A1	6.3	6.9
A2	0.9	1.1
A3	Typ0.5	
b	0.6	0.8
c	0.4	0.5
D	5.3	5.5
D2	3.65	4.05
E	5.8	6.4
E2	0.9	1.4
e	Typ2.29	
e1	Typ4.58	
L	3.7	4.3
All Dimensions in millimeter		

Marking on the body

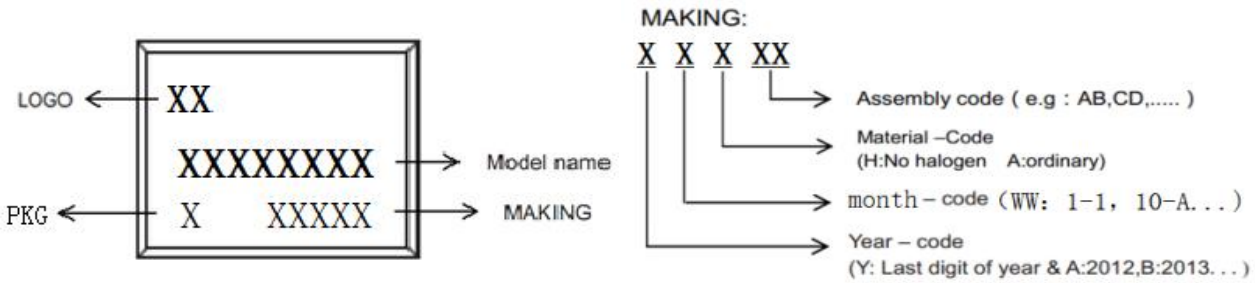

packing instruction

PKG	最小包装	内盒	外箱
TO-220F TO-220AB TO-263		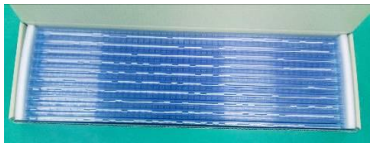	
	50pcs/管	1000pcs/盒	5000pcs/箱
TO-252			
	2500pcs/盘	5000pcs/盒	25000pcs/箱
TO-263-R			
	800pcs/盘	1600pcs/盒	8000pcs/箱
TO-251	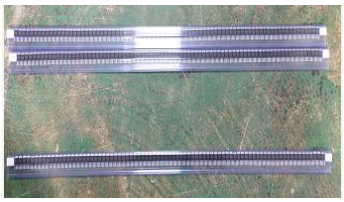		
	80pcs/管	4000pcs/盒	24000pcs/箱

Notice

All product,product specifications and data are subject to change without notice to improve.The right to explain is owned by LINGXUN electronics company.

Confirm that operation temperature is within the specified range described in the product specification. Avoid applying poer exceeding normal rated poer; exceeding the power rating under steady-state loading condition may negatively affect product performance and reliability.

LINGXUN electronics shall not be in any way responsible or liable for failure induced under deviant condition from what is defined in this document.